MCLEOD

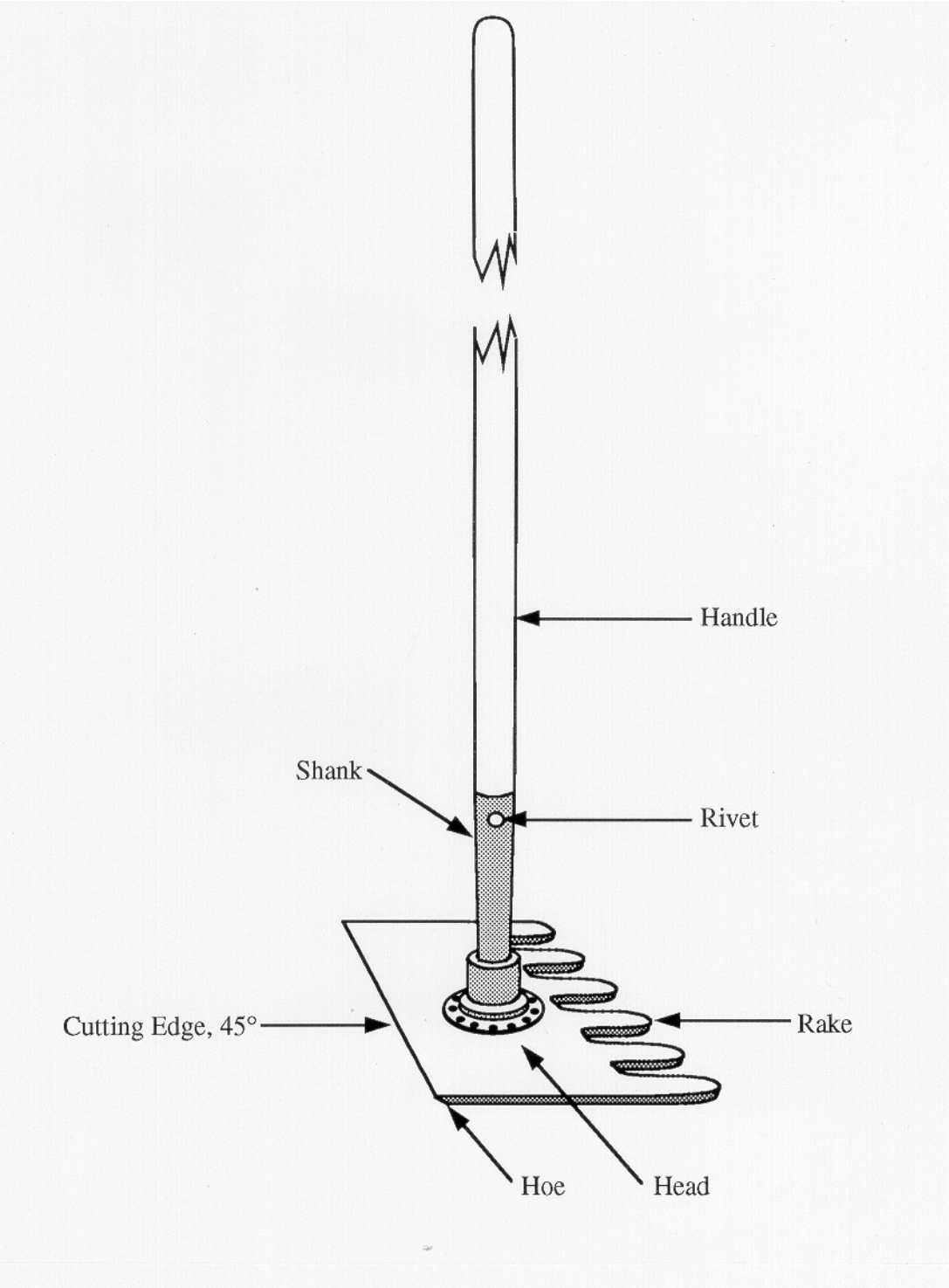
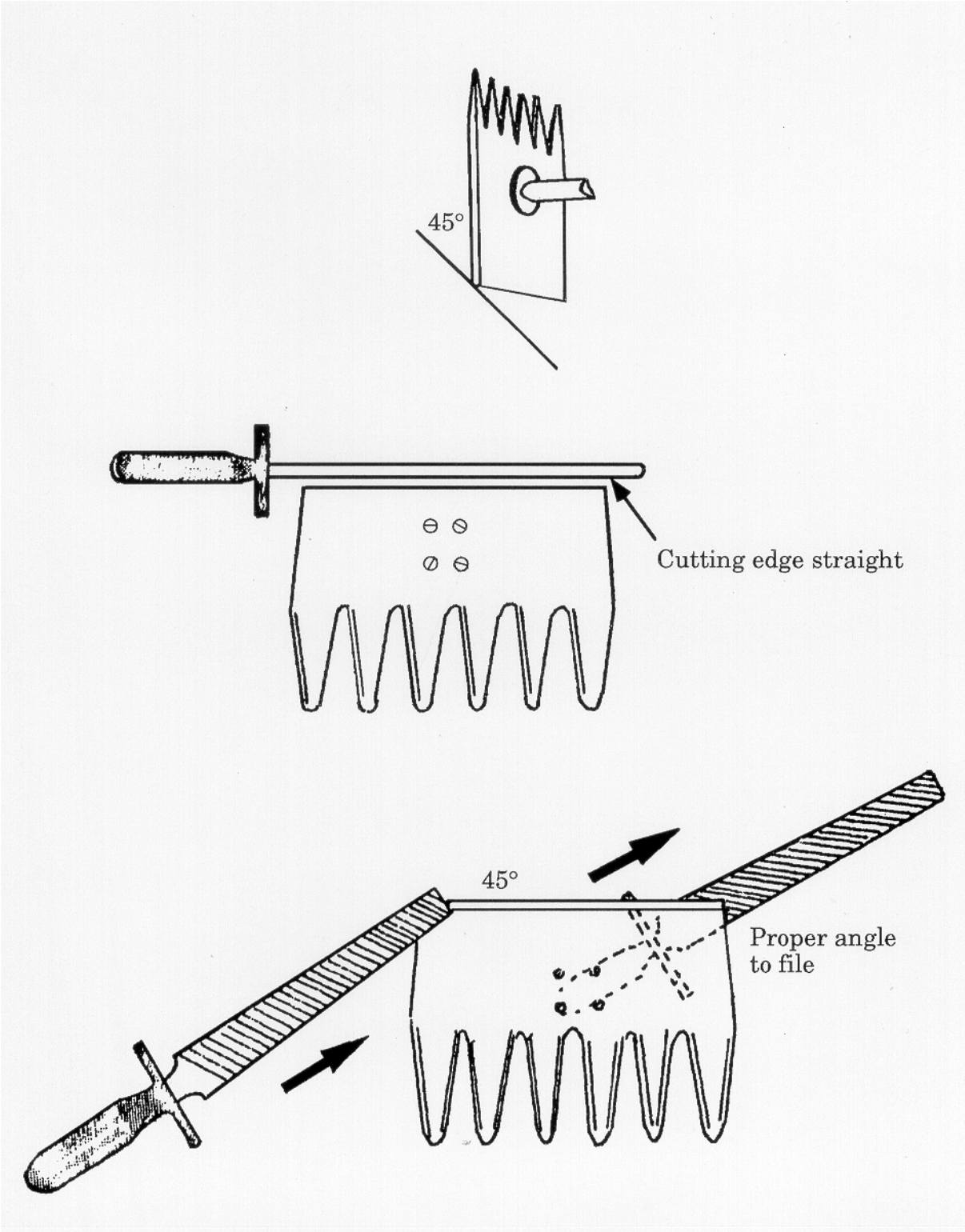
THE CORRECT METHOD OF SHARPENING