POSITIVE DISPLACEMENT PUMPS

Piston Pump

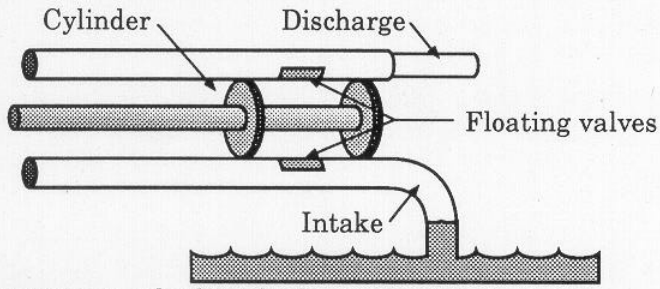

With piston fully extended the pressure inside the cylinder is equal to the pressure outside the cylinder and the intake and discharge valves are both closed.

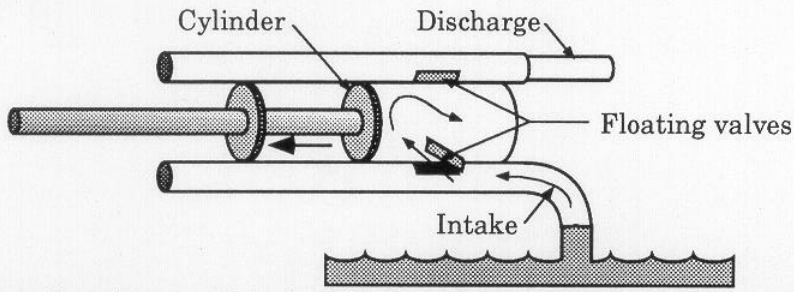

As piston is drawn back the volume within the cylinder increases thereby lowering the pressure inside the cylinder. To bring inside and outside pressure to equilibrium the intake valve opens admitting water into the cylinder.

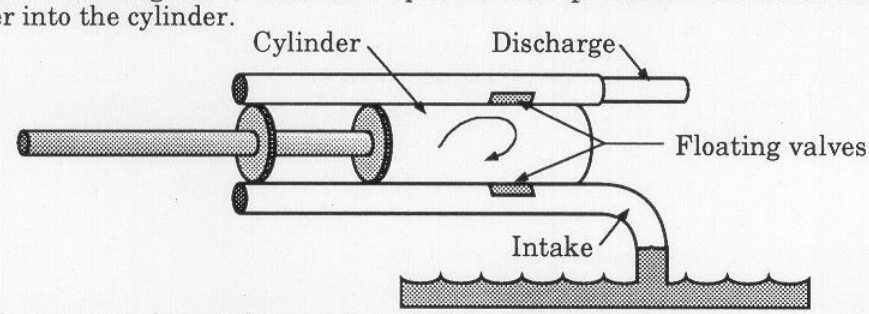

With piston fully contracted or at the top of its stroke, pressure inside and outside the cylinder equalize as the cylinder fills with water. Both valves again close.

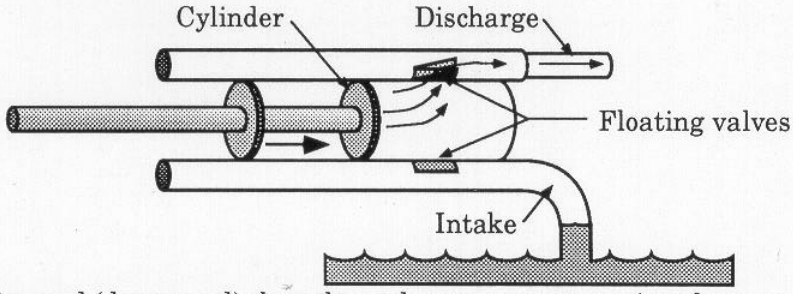

With piston moving forward (downward) the volume decreases compressing the water and increasing pressure within the cylinder. The discharge valve opens to equalize interior and exterior pressure by discharging water.

CDF 302A.1

POSITIVE DISPLACEMENT PUMPS

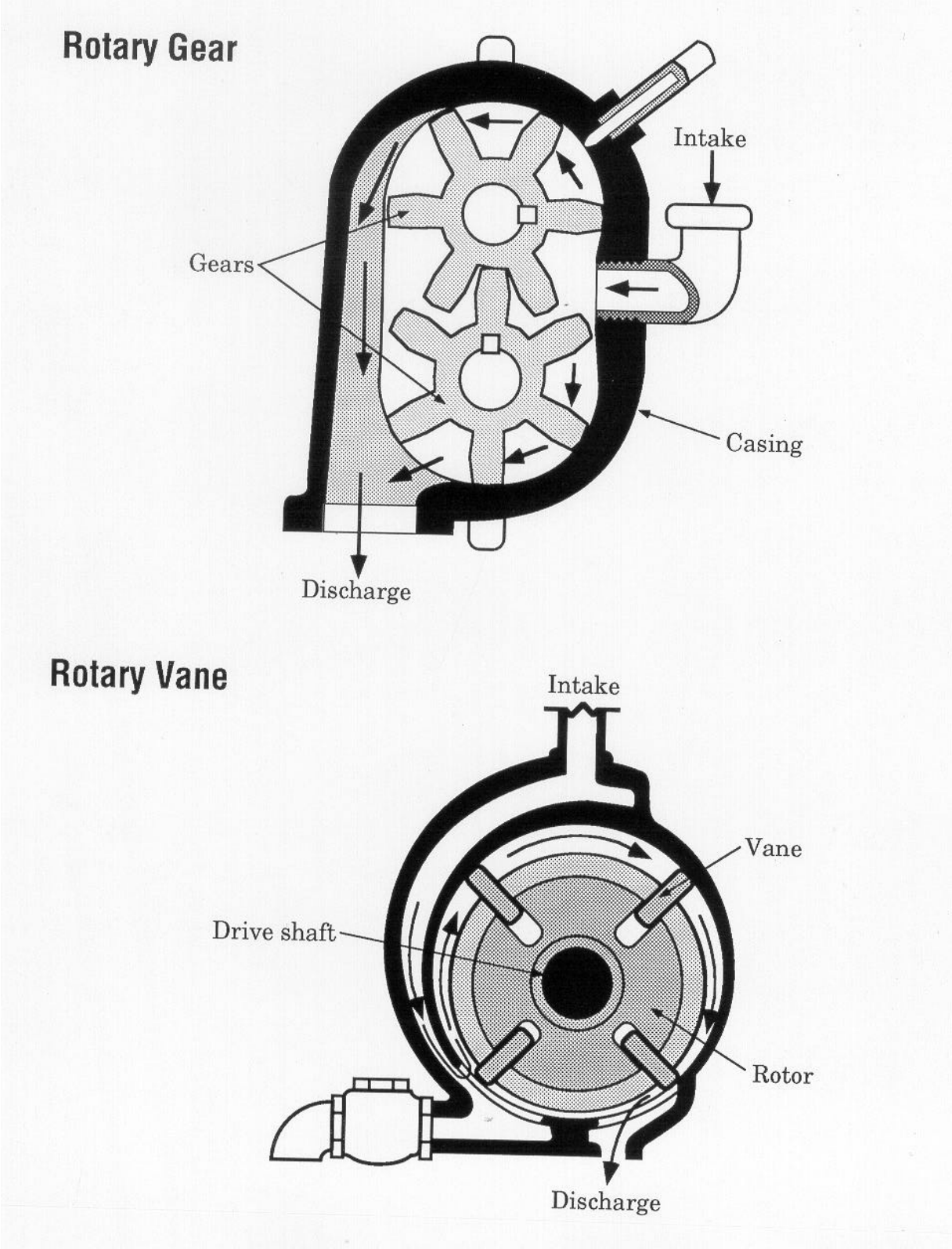

CENTRIFUGAL PUMP

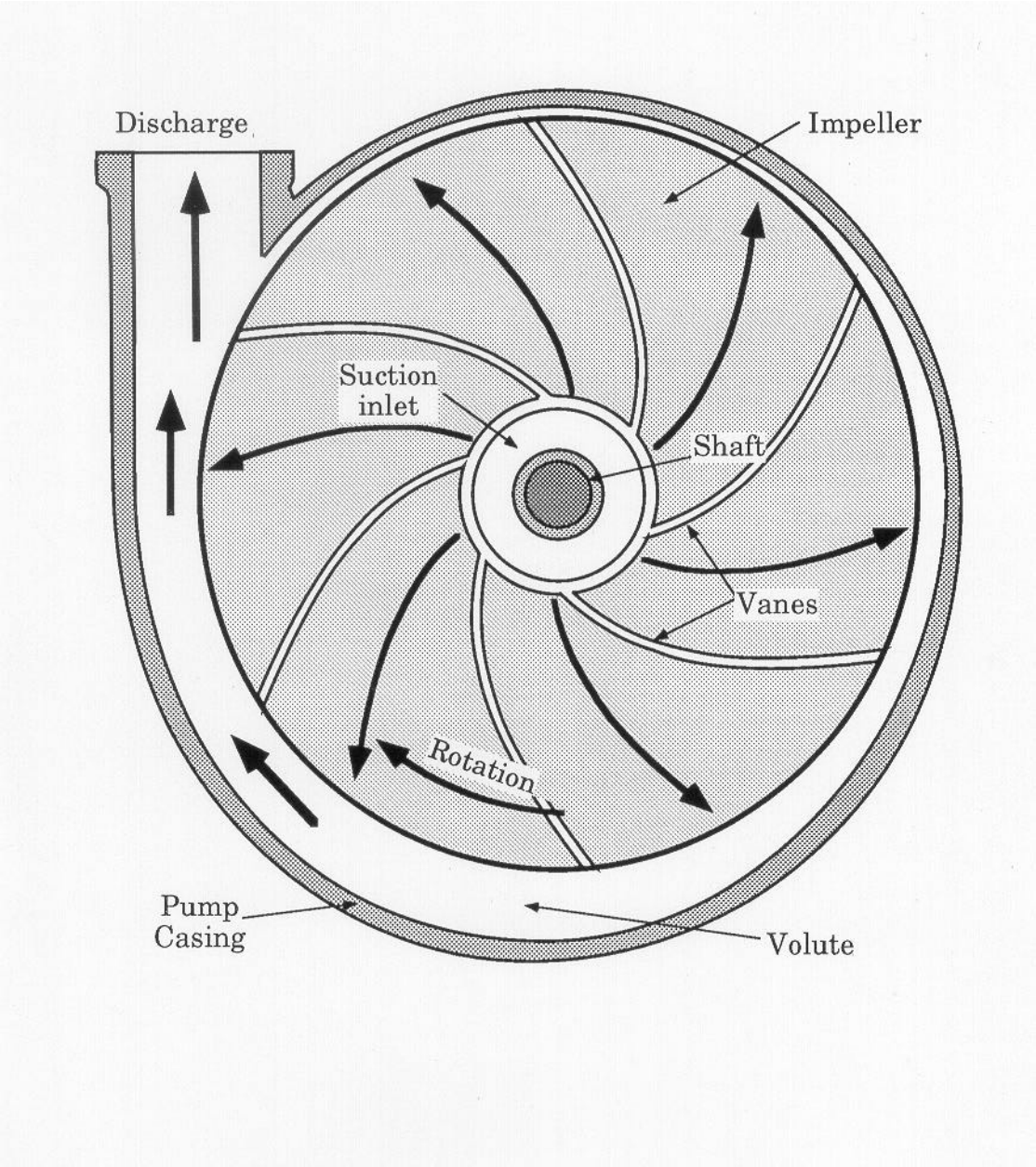

IMPELLER

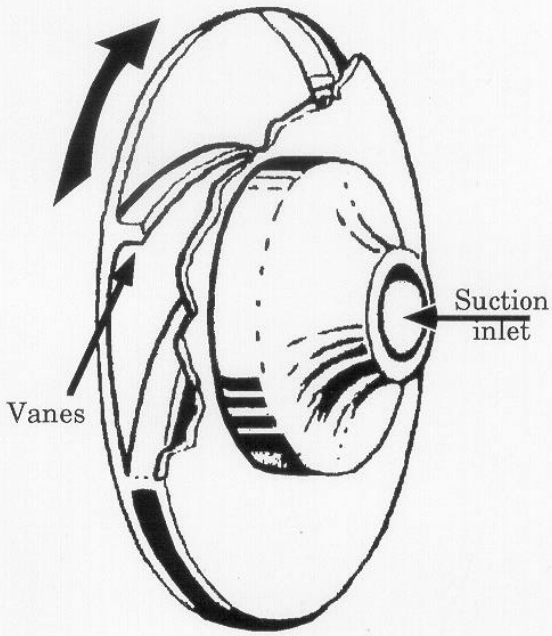
Suction
inlet
Vanes

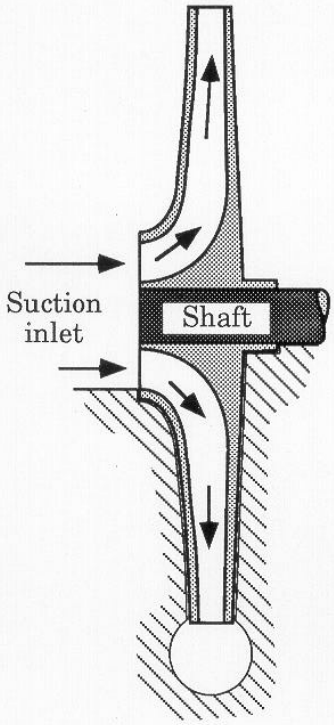
Suction
inlet
Shaft

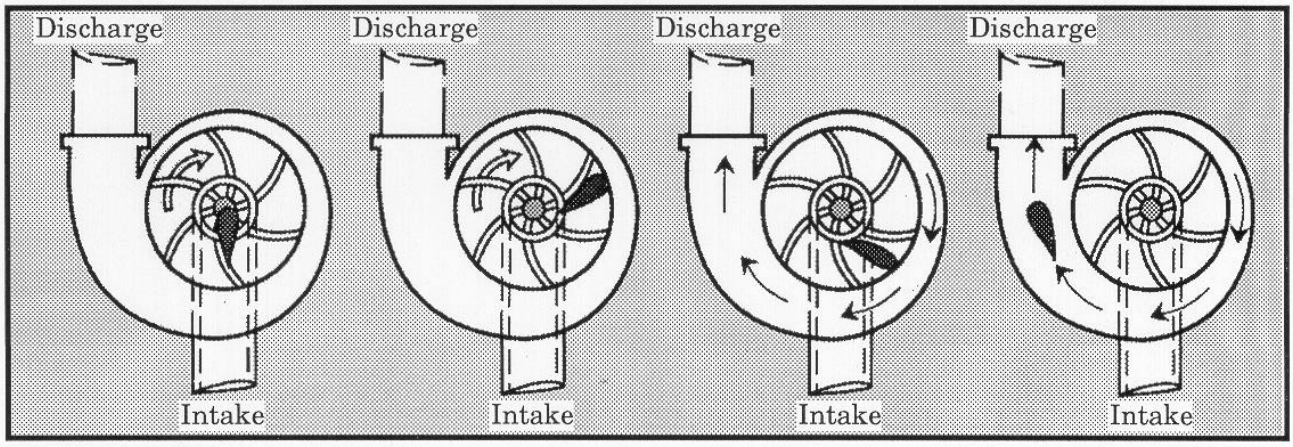
Discharge
Intake
Discharge
Intake
Discharge
Intake
Discharge
Intake

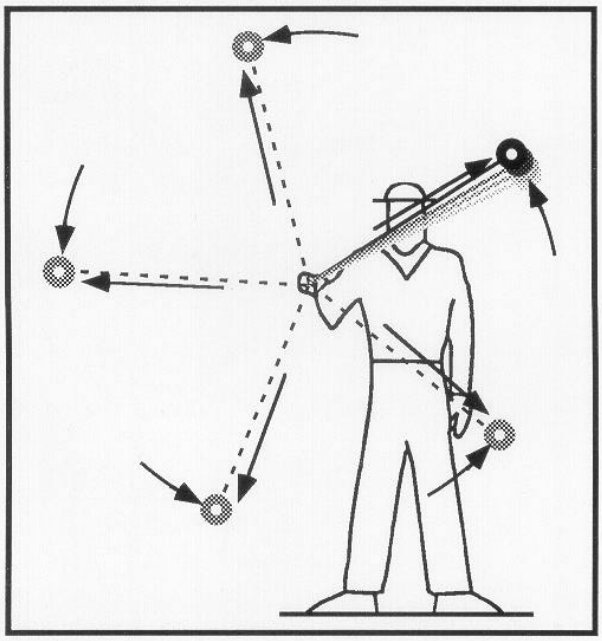

Were it not for the string, centrifugal force would cause the washer once placed in motion to fly off in a straight line. The longer the string, the greater the circumference of the circle and the greater the velocity of the washer. Increasing the revolutions per minute generated by the arm will also increase the velocity of the washer.

Due to the centrifugal force (tendency of a body in motion to travel outward from the center in a straight line), the water does not spill from the bucket even if the bucket in upside down.

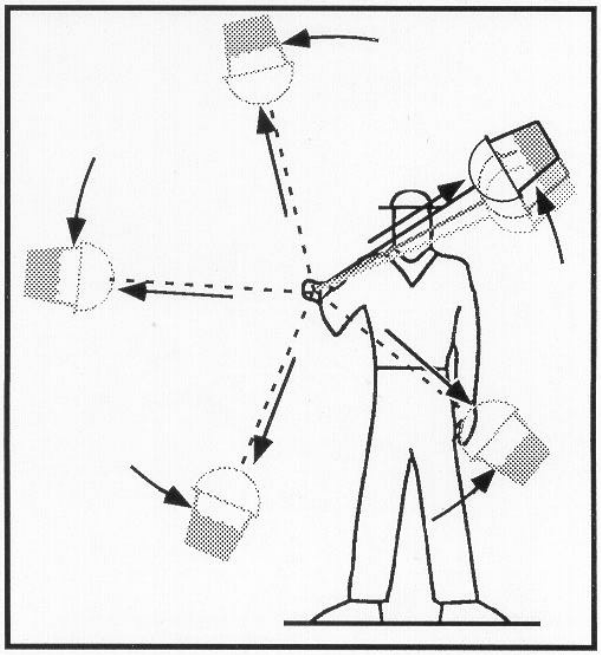

PRESSURE OPERATION

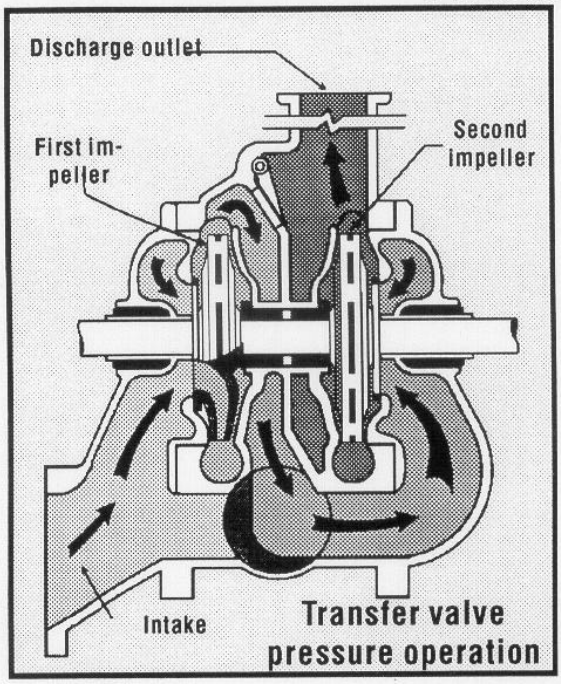

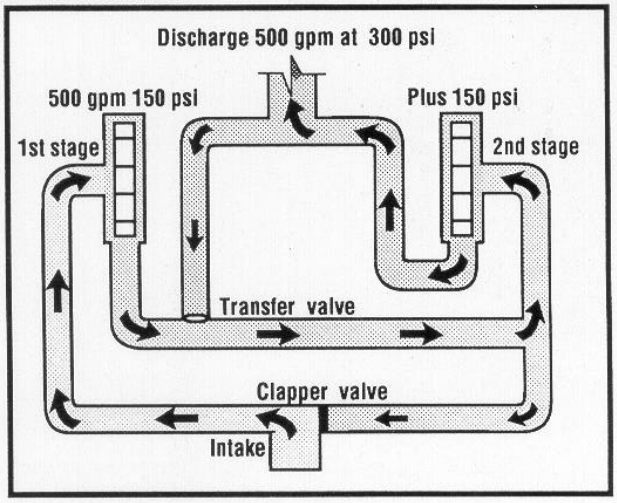

During PRESSURE operation, water goes under pressure from first impeller to second impeller where pressure is doubled.

VOLUME OPERATION

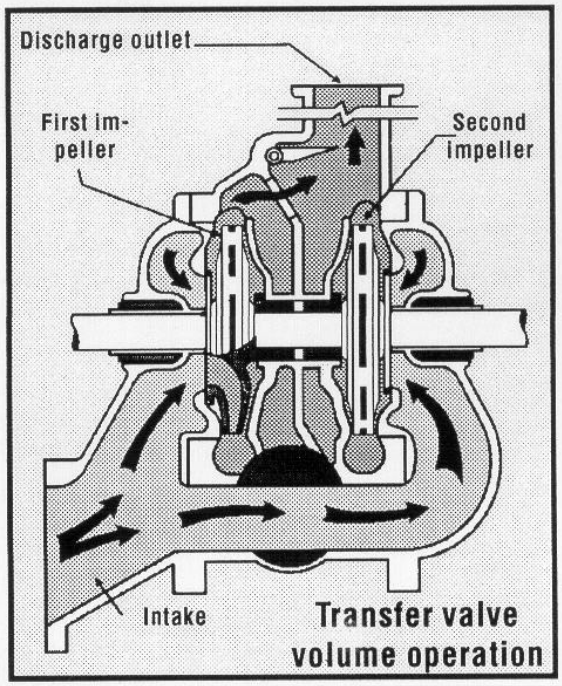

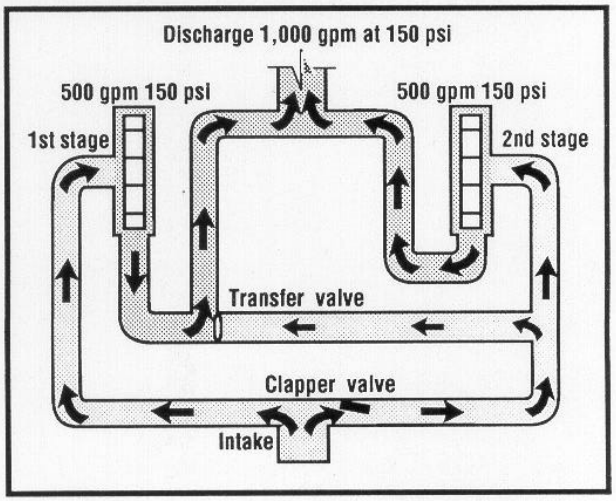

During VOLUME operation, each of the impellers takes water from a source and delivers it to the discharge.