JUMPER CABLE-COLOR CODING

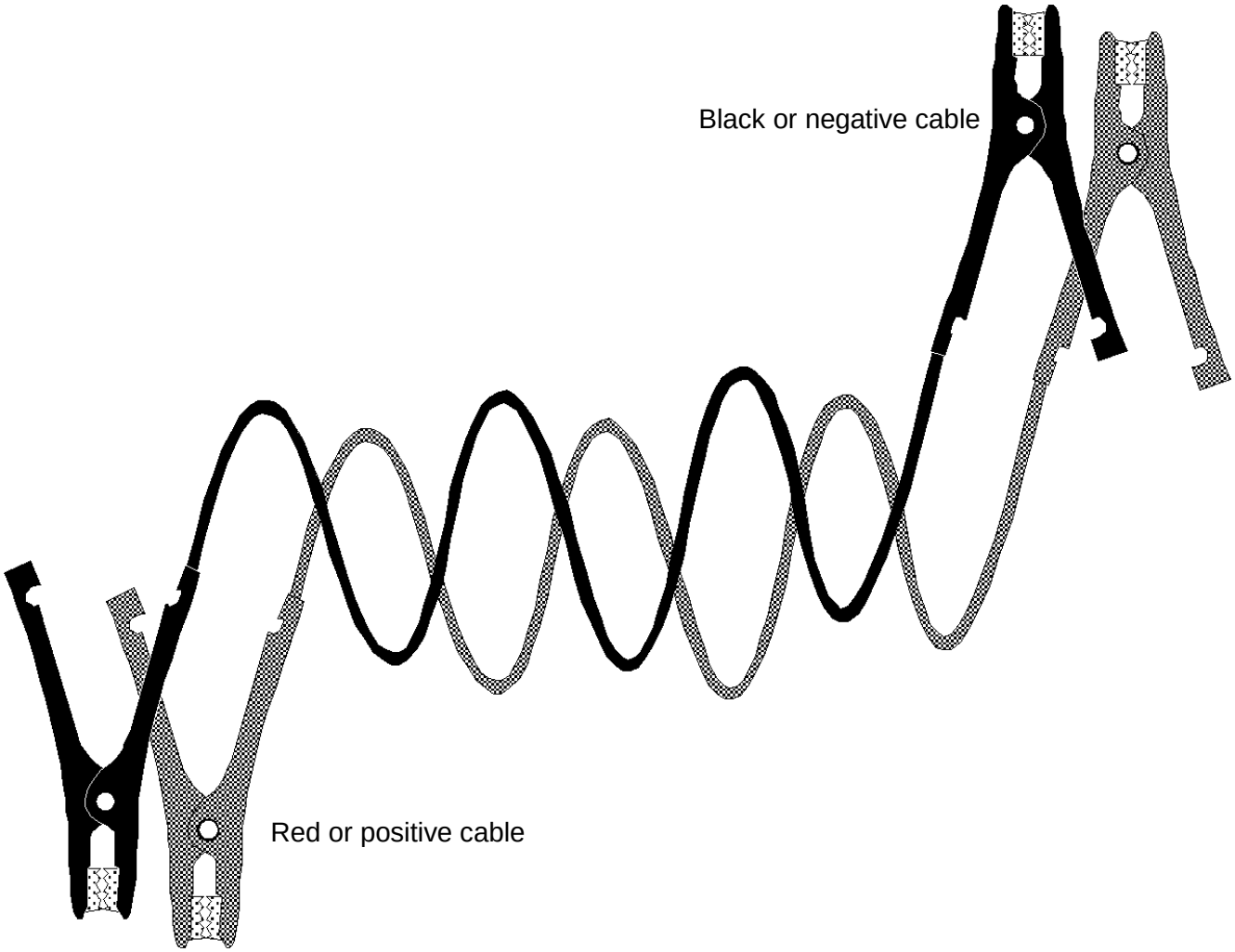

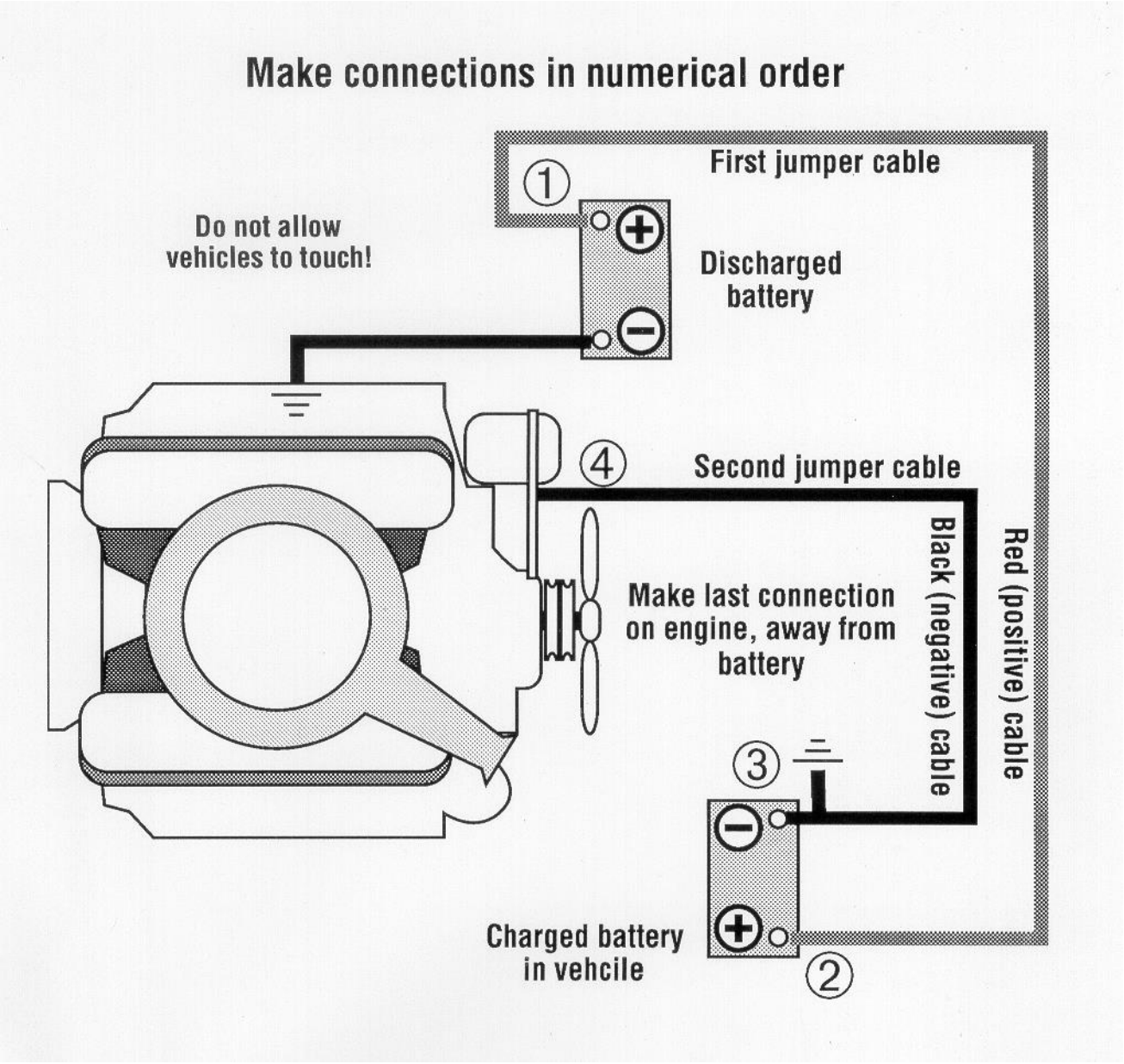
Make connections in numerical order
First jumper cable
1
Do not allow vehicles to touch!
Discharged battery
4
Second jumper cable
Black (negative) cable
Red (positive) cable
Make last connection on engine, away from battery
3
Charged battery in vehcile
2